National Weather Radar Testbed

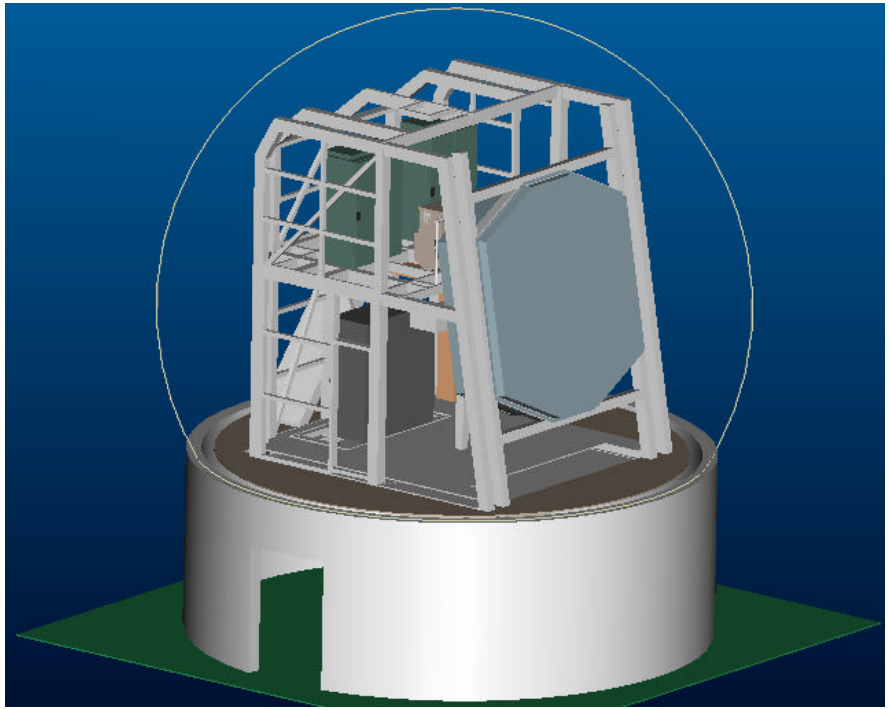

Wayne Sabin	Lockheed Martin
Walter Mazur	Lockheed Martin
Timothy Maese	Lockheed Martin
James Hunziker	Lockheed Martin
Bob Walsh	SKY Computers, Inc.

NWRT System Overview

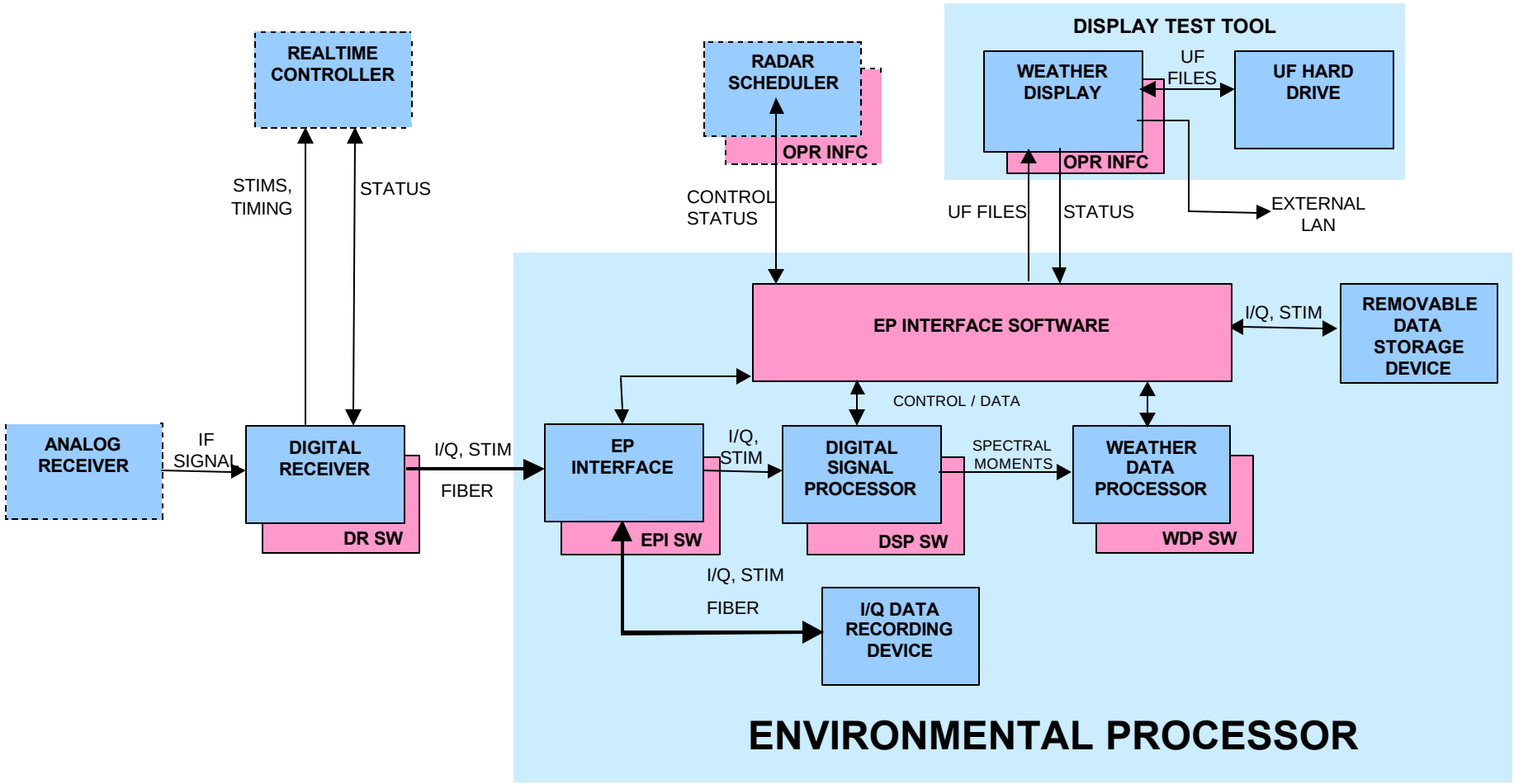

Environmental Processor Hardware Architecture

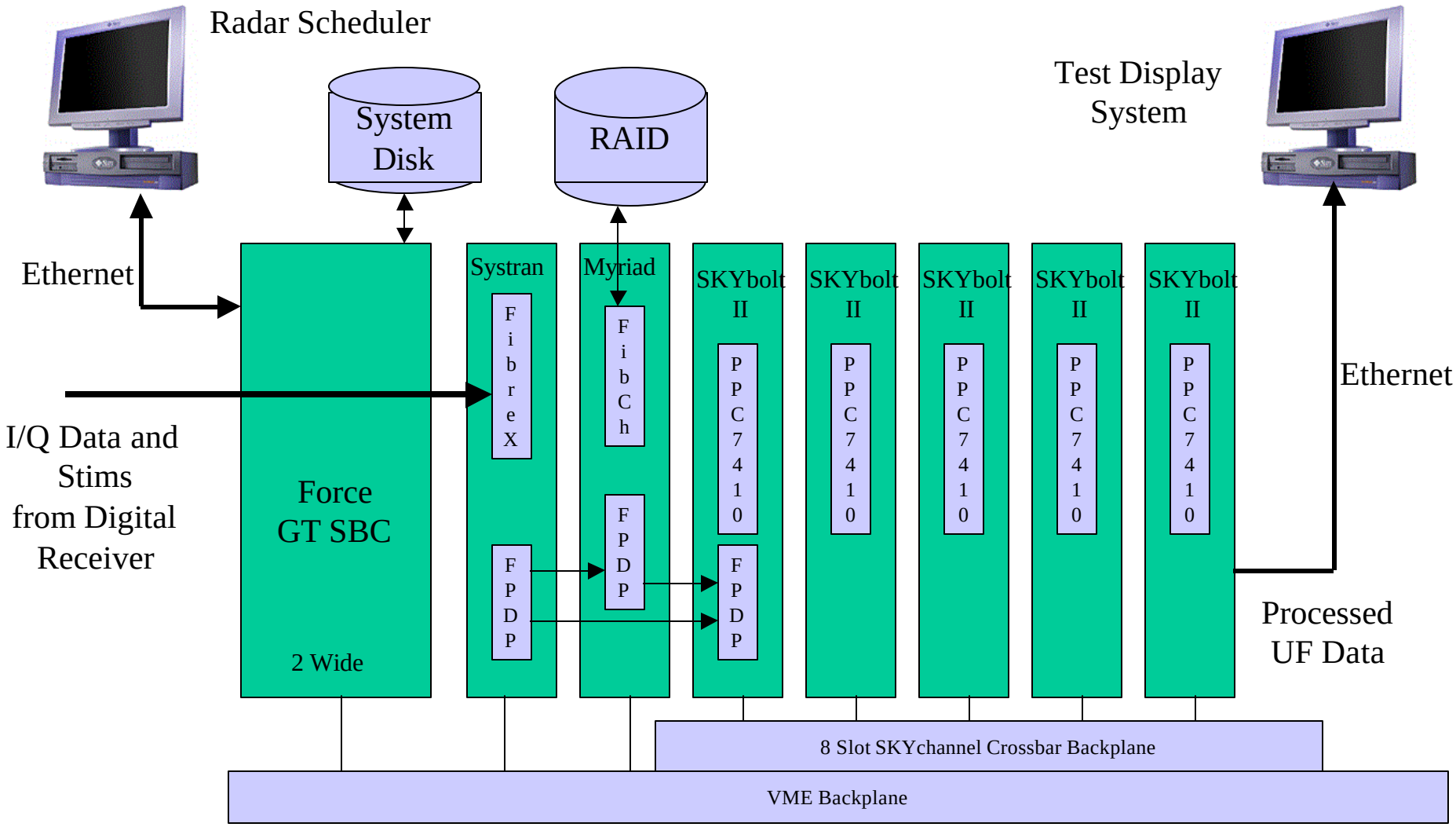

Environmental Processor COTS Hardware

- **Uses SKY Computers SKYbolt II Architecture**
  - Merlin Daughtercards - 4 PPC 7410
  - 5 Cards - 20 PPCs Total
  - 1 Gbyte RAM per Merlin
- **SKYrider FPDP Interface To Outside Data**
- **SKYchannel 8 Slot Interconnect**
  - 320 Mbytes/sec
- **Force 54VT SBC For Downloading And NFS**
  - 512 Mbyte RAM

Environmental Processor COTS Hardware

- **Echotek GC-814 Digital Receiver**
  - Echotek Raceway Interconnect
  - Echotek Raceway to PCI Module
  - 80 Mbytes/second radar data transfer to Environmental Processor

- **Systran FibreXtreme VME Card**
  - Receives FibreXtreme From Digital Receiver
  - Capable of 105 Mbytes/second - 80 Mbytes/sec used
  - Converts To FPDP (Copper)
  - Sends To Myriad and SKYrider
  - VME Supplies Power Only

Environmental Processor COTS Hardware

- **Myriad FC-1930 RAID Controller**
  - Receives Data Through FPDP
  - Writes Data To Raid in Real-Time
  - Reads Back RAID Data For Post Processing

- **Ciprico RAID**
  - 648 GByte Storage
  - Removable Disks

Environmental Processor Software

- **All software coded in C**
- **Optimized for PowerPC with SKYvec compiler**
- **DSP algorithms use VSIPL API for portability**
  - Three basic data processing modes
    - Reflectivity Only
    - Pulse Pairs
    - Pulse Doppler
  - Types of processing
    - Matched Filtering
    - Clutter Filtering
    - N-point FFTs
    - Range/Channel Averaging
    - Spectral Moment calculations (reflectivity, velocity, SNR, spectrum width)
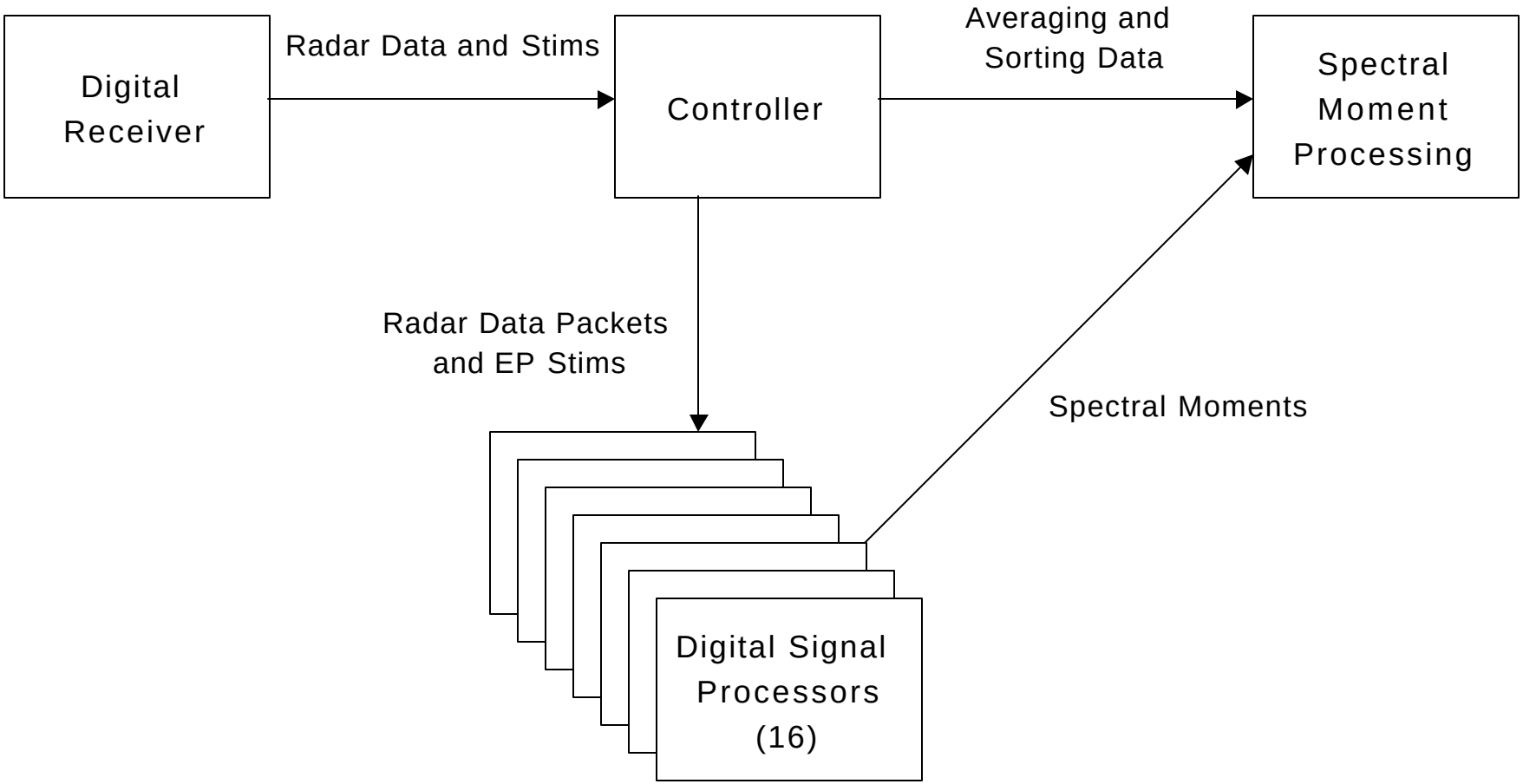
Environmental Processor Data Flow